PART NO.
DCAJ124-1

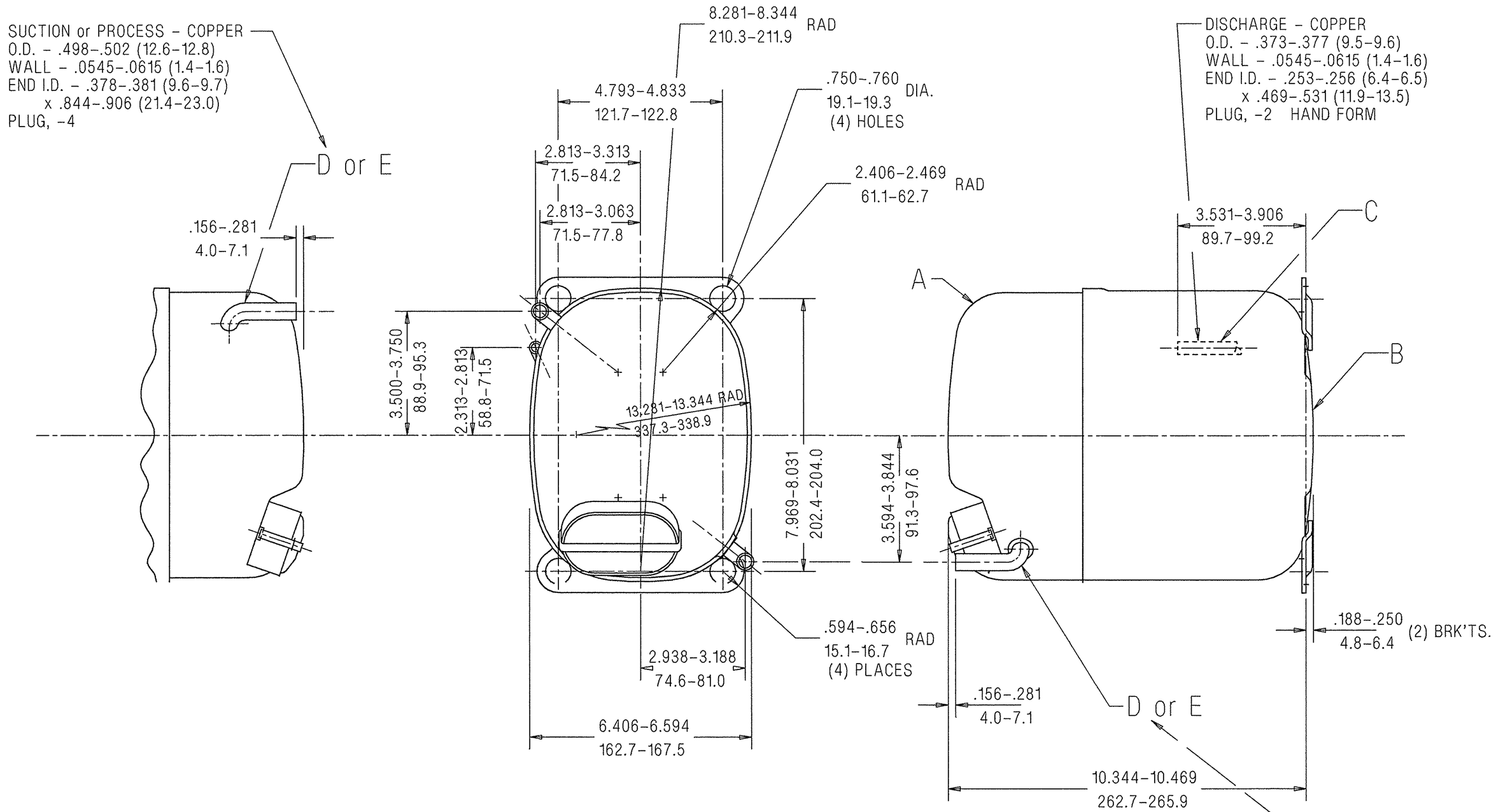

NOTE!

1. SEE DWG. #AHT-1 FOR ASSEMBLY OF DISCHARGE CONNECTOR AND LOWER SHOCK LOOP IN LOWER HOUSING.
2. SEE SPEC. "A-B" & "A-C" FOR PROCESSING.

AJ

Q.A. SYMBOLS
✱ = CATEGORY I
▲ = CATEGORY II
■ = CATEGORY III
= CATEGORY IV

A	HA-635-6
B	HA-634
C	34366
D	34372
E	34372

RLW

LT	LC	CHANGE	DATE
RBL.		#236028-000	—

THIS DRAWING OR PRINT (I) IS THE PROPERTY OF TECUMSEH PRODUCTS COMPANY AND CONTAINS PROPRIETARY AND CONFIDENTIAL INFORMATION BELONGING TO TECUMSEH. INFORMATION CONTAINED ON THE RECIPIENT ON THE EXPRESS AND SPECIFIC CONDITION THAT NEITHER IT THEREON OR DISCLOSED THEREIN SHALL BE DUPLICATED, USED OR DISCLOSED TO OTHERS WITHOUT THE EXPRESS AND SPECIFIC WRITTEN CONSENT OF TECUMSEH AND THEN ONLY INFORMATION OR ITEM SHALL NOT BE COPIED OR DUPLICATED IN ANY MANNER OR FORM WHATSOEVER WITHOUT TECUMSEH'S PRIOR EXPRESS AND SPECIFIC WRITTEN CONSENT. (IV) SHALL BE RETURNED BY THE RECIPIENT UPON REQUEST OR UPON COMPLETION OF THE SUCH REQUEST IS MADE.

DIS.CODE 340

NAME SALES COMPRESSOR

DO NOT SCALE THIS DRAWING. ALL FERROUS MATERIALS MUST NOT BE MAGNETIZED AS RECEIVED OR AT COMPRESSOR ASSEMBLY.

DWN.	CK.	APR.	SCALE
SJS 7/25/97	McCullough 7-28-97	BUNDEN	1"=2"

THIS PRINT SUPERSEDES ALL PRINTS PRIOR TO

TECUMSEH PRODUCTS CO.
TECUMSEH, MICHIGAN

MATERIAL

INTERNAL USE ONLY
UGII:DISK5:[SHERMAN]AJ-DCAJ124-01□K-C.PRT

PART NO. DCAJ124-1